Simple and efficient pre-surgical lesion localization

Philips MicroDose Mammography Needle Examination Package

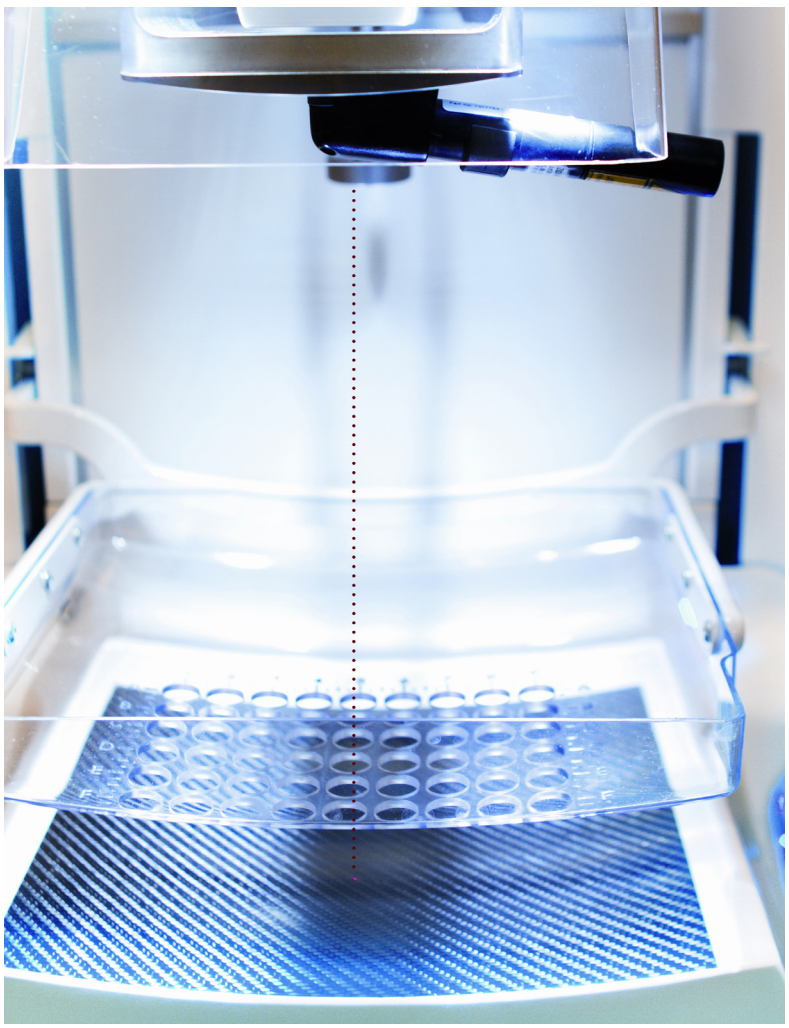

The unique guidance system – specifically designed for Philips MicroDose Mammography – includes a laser device that simplifies needle placement. The guidance system can be easily attached to the mammography system, within seconds and without requiring extra tools. The laser module is easy to handle and facilitates insertion of the needle at the correct location and angle.

Localization of lesions is crucial for breast surgeons and an important part of the pre-surgical procedure in mammography clinics. Philips laser-based needle guidance system facilitates localization of non-palpable lesions that may be difficult to find in ultrasound, but visible in mammography with a hookwire solution.

Needle alignment supported by laser guidance system

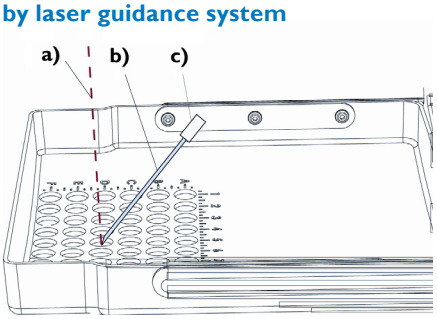

Needle tip placed on insertion point. Laser beam (a), Wire localization needle (b), Needle grip (c).

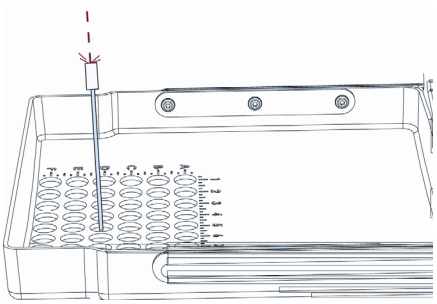

Needle in line with the laser beam.

PHILIPS

sense and simplicity

Two paddle options accommodate varying needs

The Needle Examination Package includes two types of compression paddles to accommodate different breast types and operator preference.

- The **Matrix Compression Paddle** gives the operator access to a large area of the breast (16 cm x 10.5 cm) and is recommended for all breast sizes
- The **Window Compression Paddle** increases ease-of-access to the needle insertion point within a smaller area (8 cm x 4 cm) and is designed for smaller breasts

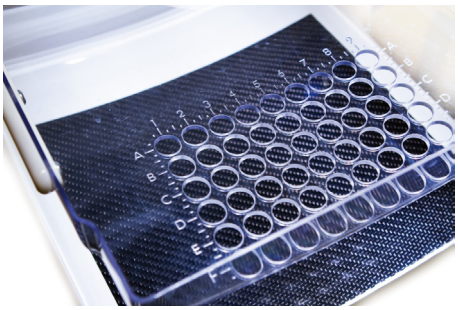

Matrix Compression Paddle.

Window Compression Paddle.

Needle Examination Package components
• Matrix Compression Paddle: a compression paddle with a 16 cm x 10.5 cm matrix of small, round holes with coordinate markings
• Window Compression Paddle: a compression paddle with an 8 cm x 4 cm hole with coordinate markings
• Needle guidance system: a laser beam system to guide the direction of the needle during examinations; includes storage case
• Needle examination software

Needle Examination Package.

Please visit www.philips.com/microdose

© 2012 Koninklijke Philips Electronics N.V.
All rights are reserved.

Philips Healthcare reserves the right to make changes in specifications and/or to discontinue any product at any time without notice or obligation and will not be liable for any consequences resulting from the use of this publication.

Philips Healthcare is part of Royal Philips Electronics

www.philips.com/healthcare
healthcare@philips.com

Printed in The Netherlands
4522 962 84381 * MAR 2012